GeoDH Training

25 November 2014
Webinar – UK

Co-funded by the Intelligent Energy Europe
Programme of the European Union

Promote Geothermal District Heating Systems in Europe

GeoDH

Section B – District heating

Introduction
Planning
Geothermal plant

elaborated by

Morten Hofmeister (Danish District Heating Association)
Søren Berg Lorenzen (Danish Geothermal District Heating)

Co-funded by the Intelligent Energy Europe Programme of the European Union

Introduction

Section B – District Heating

Planning

- Existing or new DH infrastructure
- Heat demand
- Other producers
- Interaction between geothermal and other producers

DH network

- Transmission and/or distribution network
- Temperature level

Geothermal plant

- Principal sketch
- Heat exchangers
- Heat pumps
- Design of plant size
- Water chemistry

Generations of District Heating

District heating from 1G to 4G

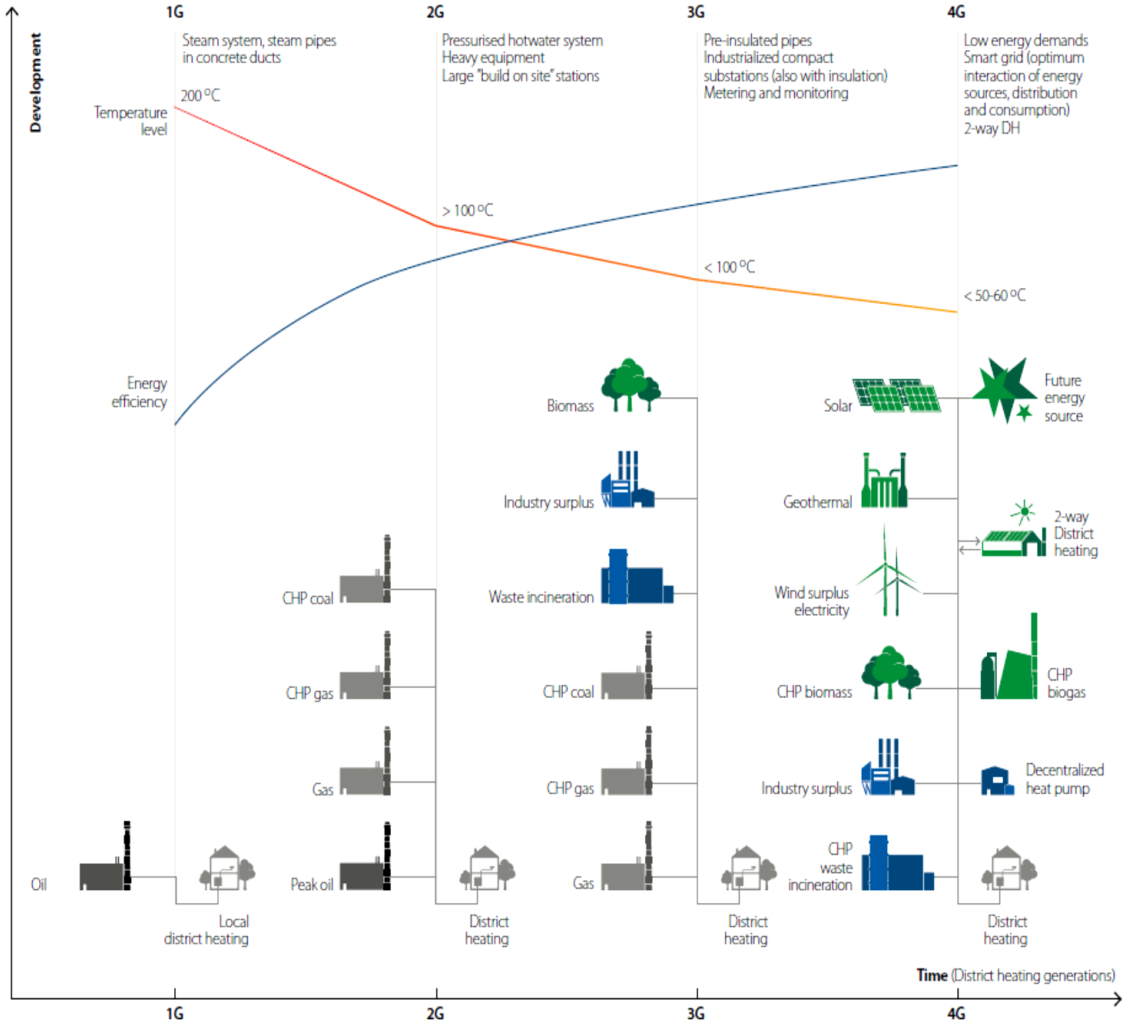

- Decreasing flow temperature and increasing efficiency
- Increasing diversification of heat sources
- Heat Roadmap Europe
- www.4DH.dk

Planning

Planning – existing or new infrastructure

New DH infrastructure

- Investment in DH
- Design according to temperature level og goethermal source
- Reduced investment in e.g. heat pumps

Existing DH infrastructure

- Investment in DH reduced but may include transmission pipeline
- Design according to current parameters in DH network
- Additional investments in heat pumps etc.

Planning – heat demand

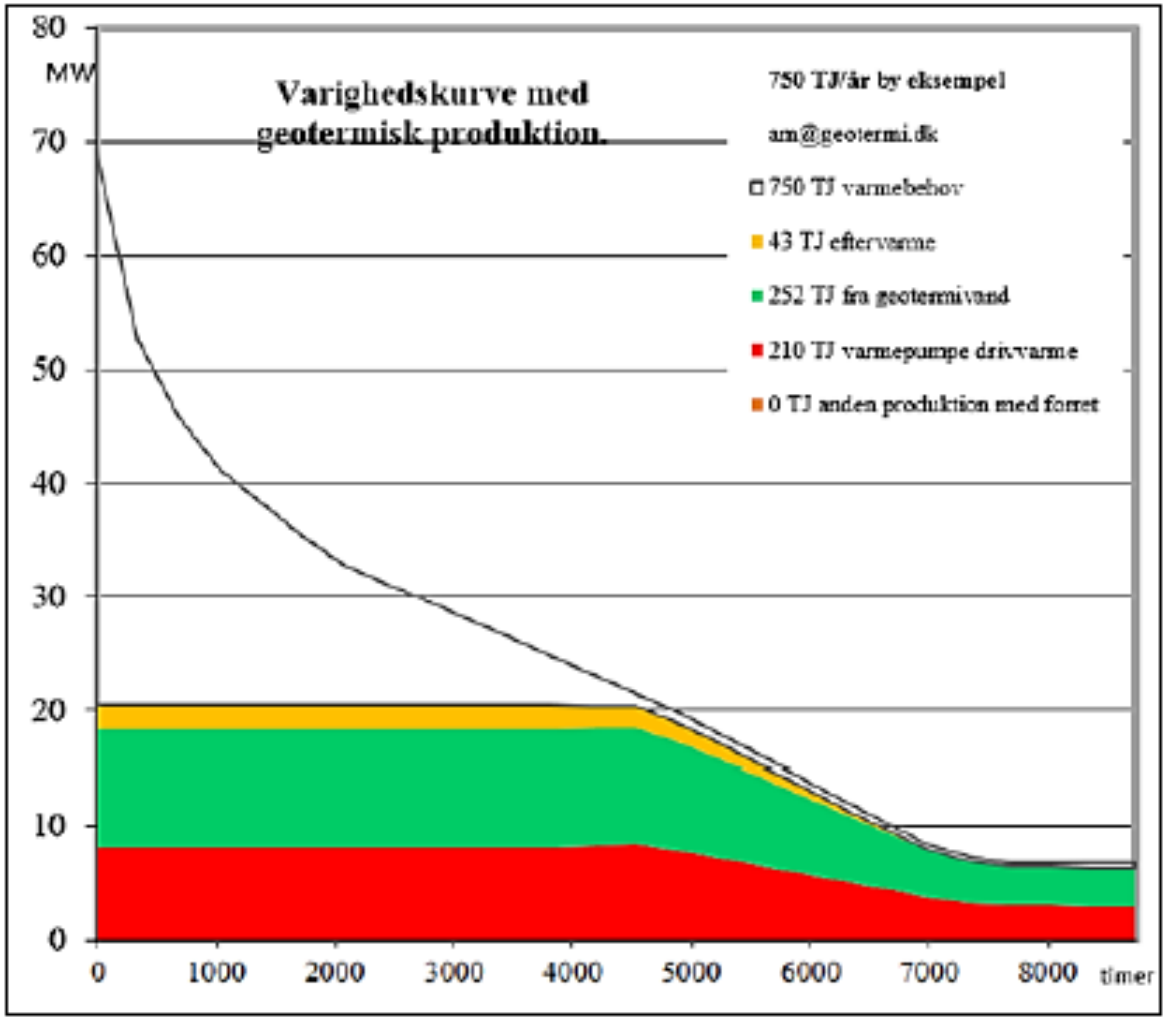

- Load duration curve – green area - geothermal, red area - driving energy
- Size, profile and development of heat demand

Planning – interaction with existing heat supply

Combined heat and power

Waste incineration

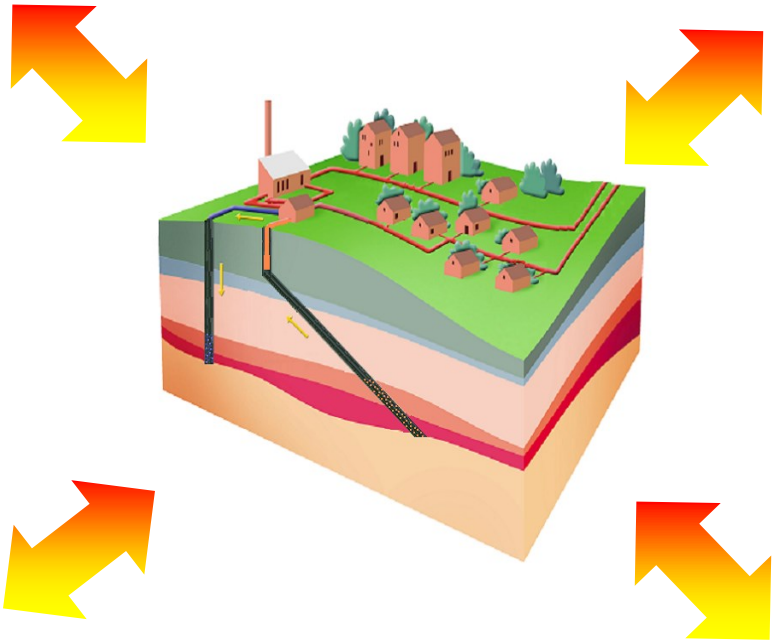

Biomass
(straw, wood chips, wood pellets etc.)

Natural gas

Planning – choice of technology

District heating source	Investment		Operation incl. fuel, electricity and taxes	
	[MEURO/MW]	Risk	[EURO/kWh]	Risk
Geothermal	1.8	High	13	Low-medium
Gas boiler	0.1	Low	60	High
Biomass boiler	0.8	Low-medium	35	Medium-high

The characteristics of the other producers should be identified, including:

- Production type, fuels etc.
- Production capacity
- Production costs (of heat)
- Operation and maintenance costs
- Year of establishment
- Expected remaining life time
- Regulation of the production type (taxes etc.)

DH network – transmission and distribution networks

- The characteristics of an existing transmissions and distribution network:
  - Current operating parameters (temperature, pressure and capacity)
  - Possible operating conditions, also taking into account the housing installations

- The location of the network:
  - Where the geothermal heat could be connected
  - Size and capacity of the transmissions pipeline
  - Analysis of the flow in the existing district heating network
  - The costs of connecting the geothermal heat source to the district heating network can be estimated, including the investment costs in a transmission pipeline and possible costs related to the adjusting the existing district heating network.

DH network – low temperature level

- Reducing the need for increasing the temperature level
- Reducing the heat losses in the DH network

- Higher pumping costs
- Investments in refurbishment of housing installations

Geothermal plant – project plan

Task	Duration Years	Year 1	Year 2	Year 3	Year 4	Year 5	Year 6	Year 7
Authorities	5	XX	XXXX	XXXX	XXXX	XXXX	XX	
Project development	2	XXXX	XXXX					
Seismic investigations	1.5			XXXX	XX			
Drilling	2				XX	XXXX	XX	
Surface	2						XXXX	XXXX

- Time schedule for geothermal project may be up to 5–7 years
- Project development includes evaluation of a local context of geothermal project
- A key focus is to continuously evaluate the project in order to qualify the decision whether to continue or terminate the project development and implementation

Geothermal plant

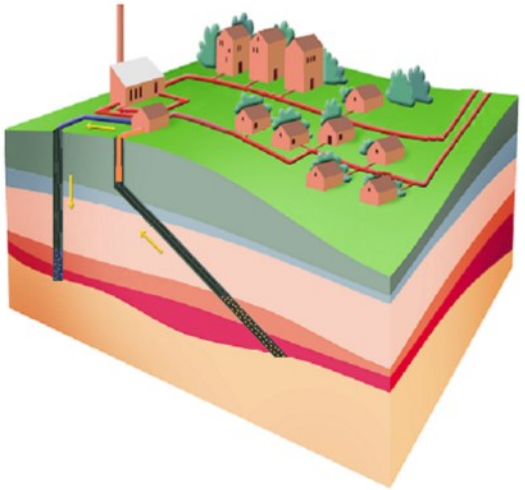

Geothermal plant – principal sketch

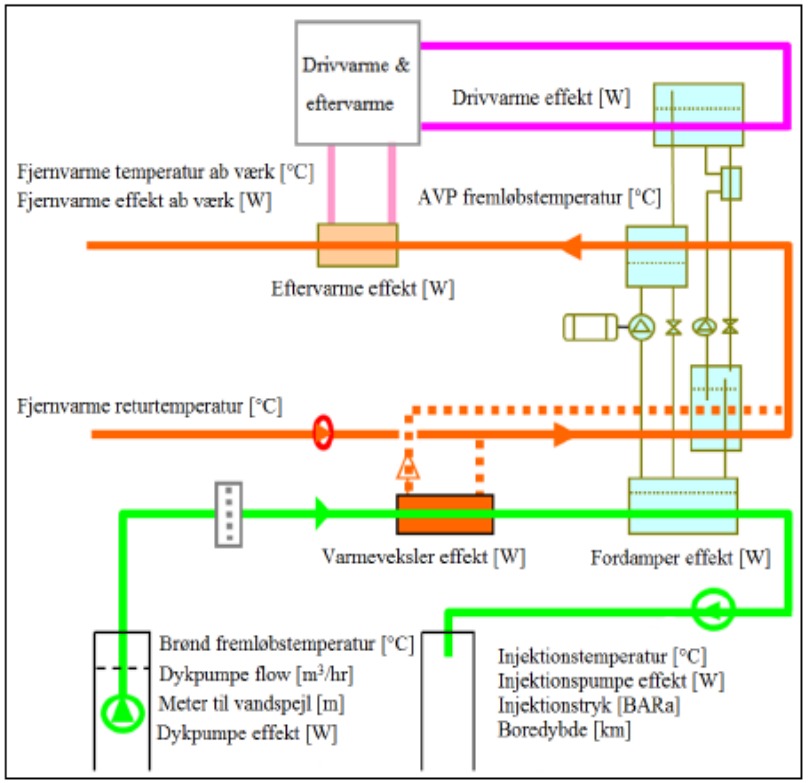

- The return water from the district heating network (“Fjernvarme returtemperatur”) is heated by the geothermal water (“varmevekslereffekt”)
- In order to increase the flow temperature of the district heating water (“Fjernvarme temperature ab værk”) the water is heated in a heat exchanger (“Eftervarmeeffekt”) by an absorption heat pump (“Drivvarme & eftervarme”).
- Alternatively, the second increase of the temperature of the district heating water could be made by a heat pump driven by electricity

Geothermal plant – surface plant

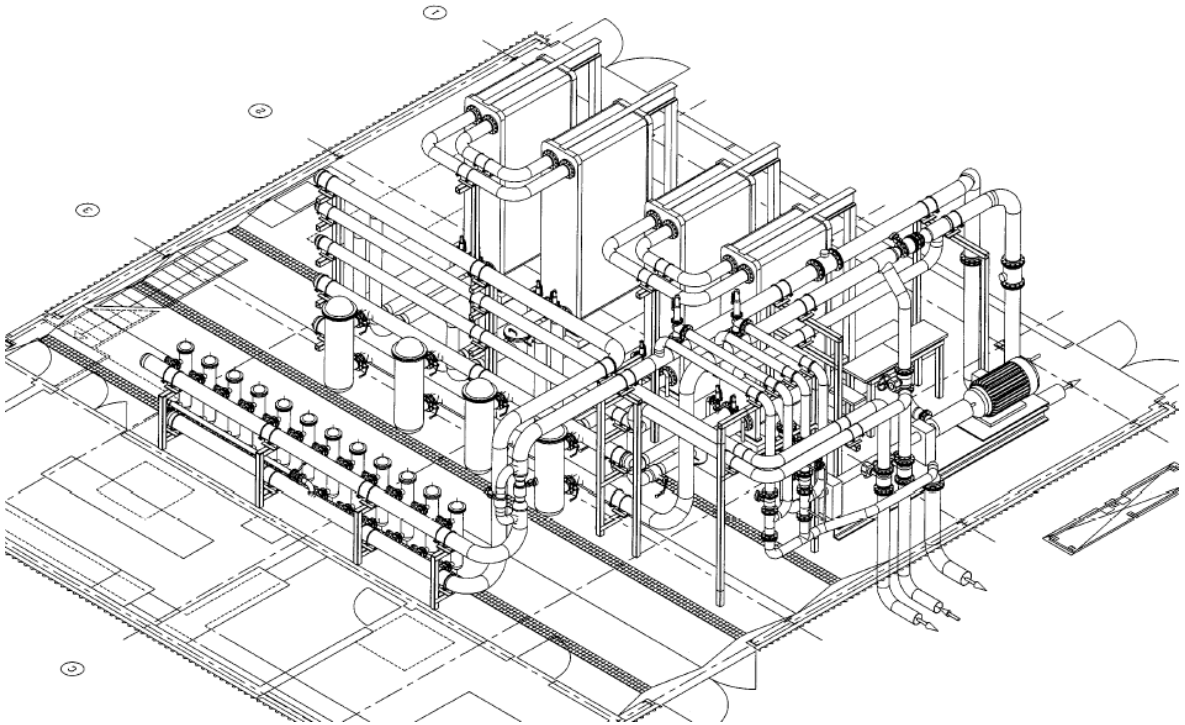

The purpose of the surface plant is to:

- pump the geothermal water from the reservoir,
- transfer the heat to the district heating water in an efficient way, and
- pump back the cooled water into the reservoir

Geothermal plant – surface plant

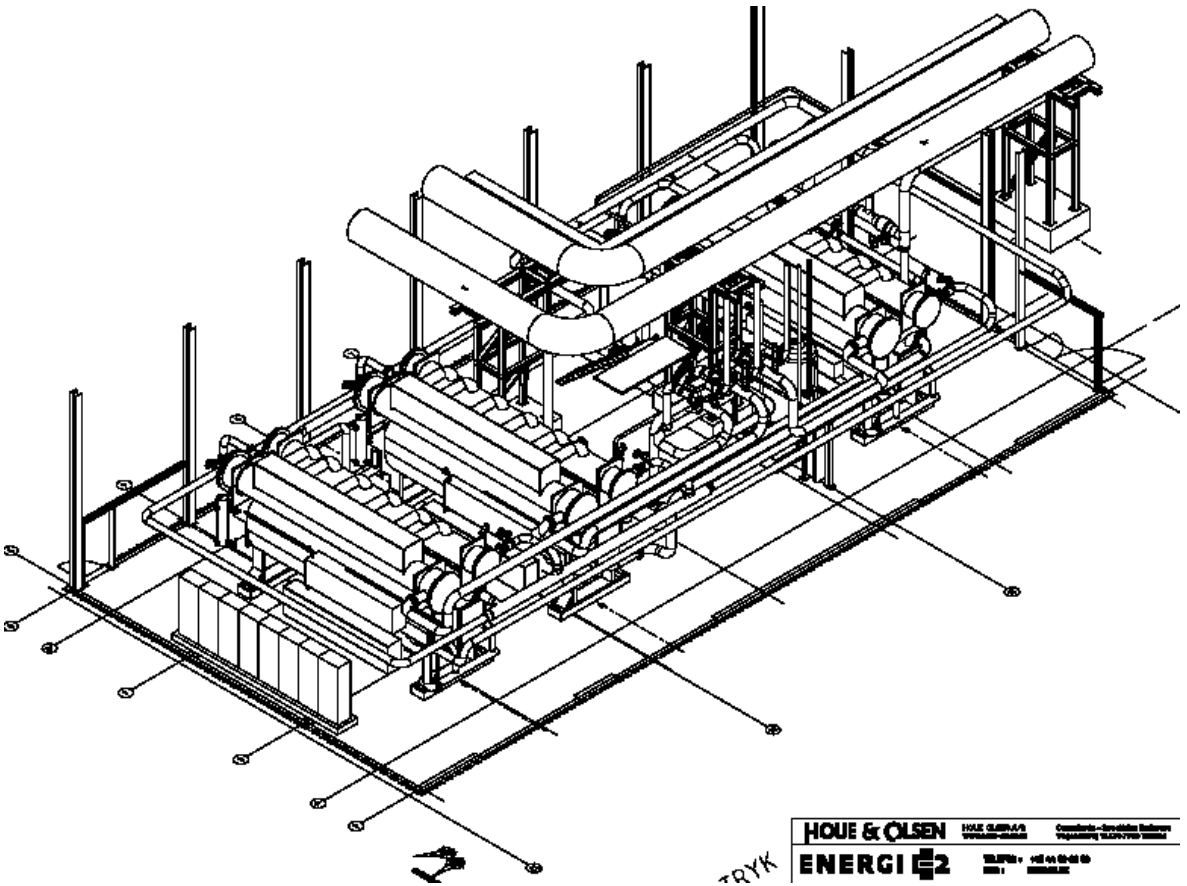

The purpose of the surface plant is to:

- pump the geothermal water from the reservoir,
- transfer the heat to the district heating water in an efficient way, and
- pump back the cooled water into the reservoir

Geothermal plant – injection well

Geothermal plant – injection pump

Geothermal plant – GDA filters

Geothermal plant – GDA filters

Geothermal plant – heat exchangers

- High plate heat exchangers in series ensure an efficient transfer of heat energy from the geothermal water to the district heating water

Geothermal plant – heat pump

The purpose of a heat pump is two-fold:

- To increase the temperature level of the geothermal water to the level of the district heating flow temperature
- To extract as much heat energy as possible from geothermal water before it is pumped back into the reservoir, thus extracting as much energy as possible from each m^3 of geothermal water

Geothermal plant – plant size

- After investigations of the potential and the capacity of geothermal heat source, as well as the other existing and potential heat sources, a feasible design including heat pumps etc. can now be elaborated
- The design should in particular take into account the size and profile of the existing and projected heat demand

Geothermal plant – water chemistry

Chemistry of geothermal water needs to be taken into account when designing the geoDH plant. Operational problems can occur from degassing, corrosion, precipitation/scaling, particle production, etc.

The risks of such problems should be examined carefully, preferably on the basis of thorough analyses of samples taken downhole in the geothermal wells. Based on these analyses, preventive actions can be necessary, e.g.:

- Increasing the pressure in the surface installations in order to stay above the bubble point
- Filtering - both at reservoir level (screens and gravel packs) and at surface (mechanical, bag and/or cartridge filters)
- Choosing more proper materials that are less prone to corrosion /precipitation
- Injection of inhibitors to prevent scaling or corrosion, perhaps even downhole

  Also regular treatments like (soft) acidizing and cleaning the wells (mechanical, through pumping out) can be necessary